Utility System Operation

Presented by

Scott Peele PE

Progress Energy

Utility Power System

- Utility System Overview
  - Transmission System
  - Distribution System
- How the System Works
  - Transmission
  - Distribution
- Why It Works That Way
  - Design Philosophy
  - Events & Causes

Progress Energy

Transmission System Overview

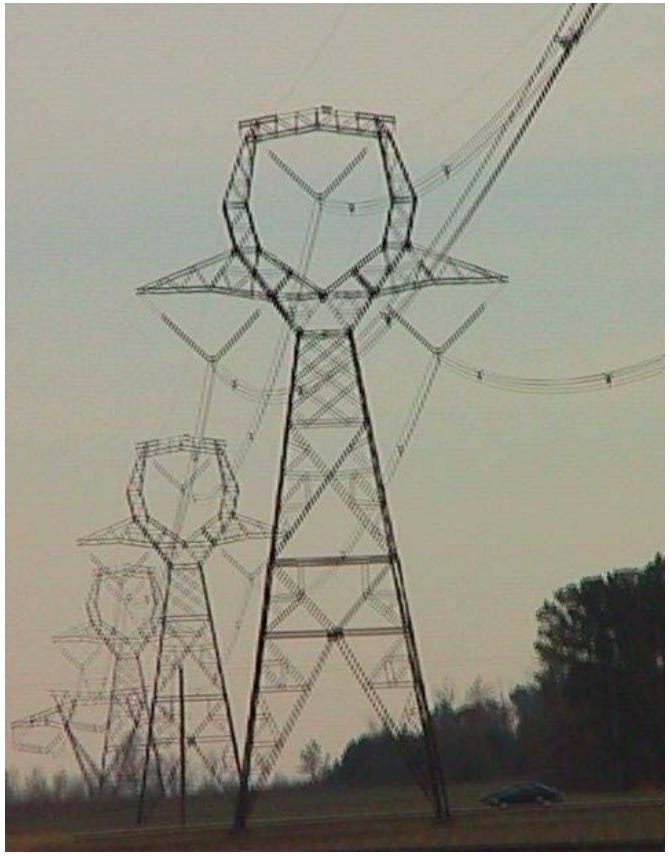

- High Voltage
  - 500 kV
  - 230 kV
  - 115 kV
- Purchased Right-of-Way
  - Wide
  - Cleared
  - Utility Has Some Control
- Few Attachments
- Very Reliable
- Few Disturbances

Progress Energy

Distribution System Overview

- Medium Voltage
  - 23 kV
  - 12 kV
- Constructed Along Public Roads
  - Other Utility Attachments
  - Less Clearance to Trees
  - More Public Access
  - More Exposure
- Most Customers Served This Way
- More Disturbances

Progress Energy

System Design Philosophy

- Protect Transmission & Distribution Lines and Equipment
- Minimize Number of Extended Outages
- Minimize Number of Customers Out Due to a **Fault**
- Trade-off is More Short Duration Events

Automatic Reclosing Feeder Breakers at a T-D Substation

Progress Energy

Protective Coordination Equipment

- Automatic Reclosing Circuit Breakers
  - Transmission & Distribution
- Automatic Line Reclosers
  - Distribution System
- Fuses - (Fused Cut-Outs)
  - Mostly On Distribution
- Grounding & Bonding
  - Critical for Safety & Protection
- Lightning Arrestors
  - Limit Voltage, Divert Current

Progress Energy

Automatic Three Phase Line Recloser

Progress Energy

Single Phase Line Reclosers

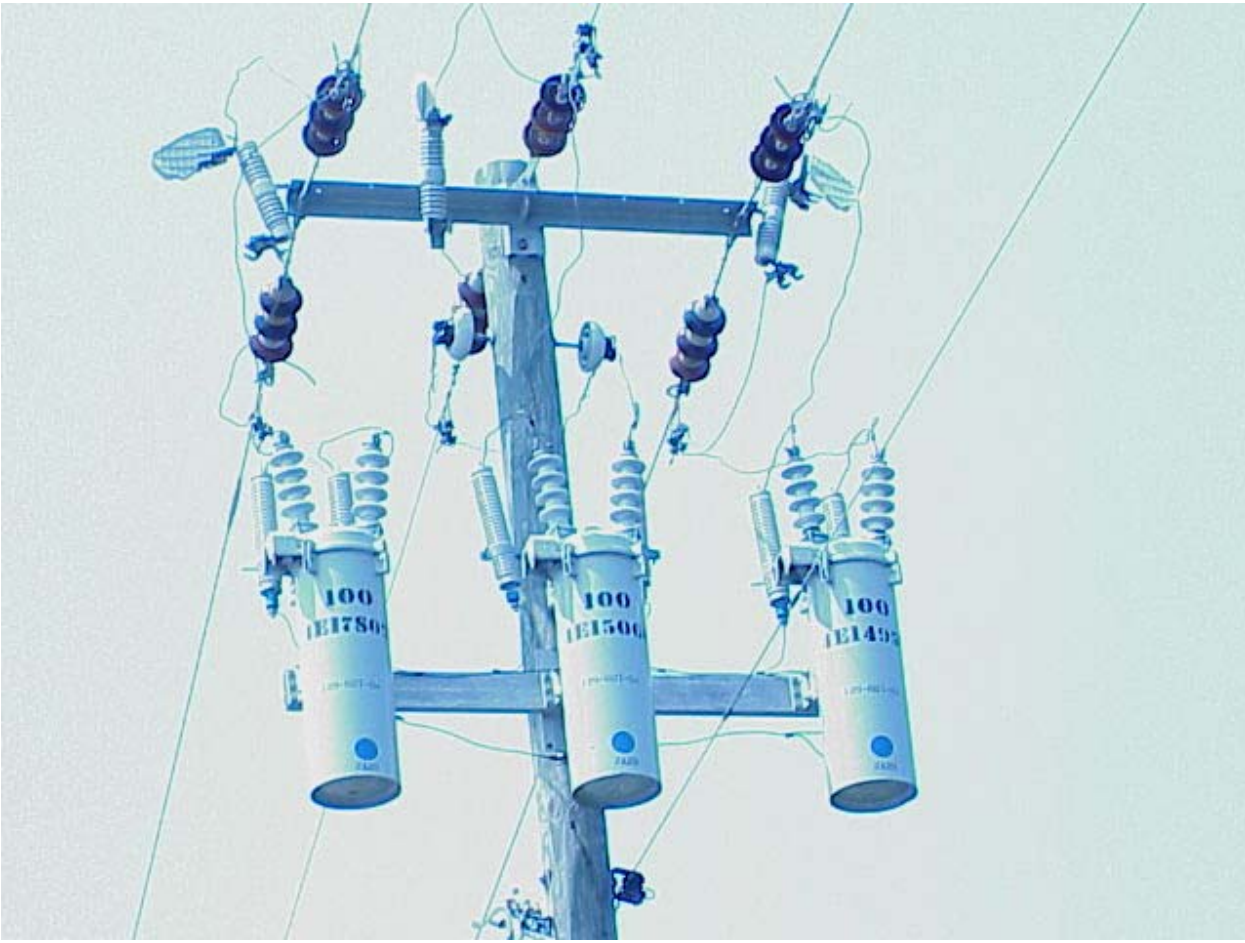

Progress Energy

Three Phase Dip Pole Fuse

Progress Energy

Tap Line Fuse - Fused Cutout

Progress Energy

Faults cause voltage sags, interruptions and outages

- Sag
- Interruption
- Outage

- Magnitude and Duration
- Magnitude and Duration
- Duration

- Sag
- Interruption
- Outage

- - 10% and <1 minute
- - 90% and < 1 minute
- > 1 minute

Progress Energy

Simplified Transmission & Distribution System

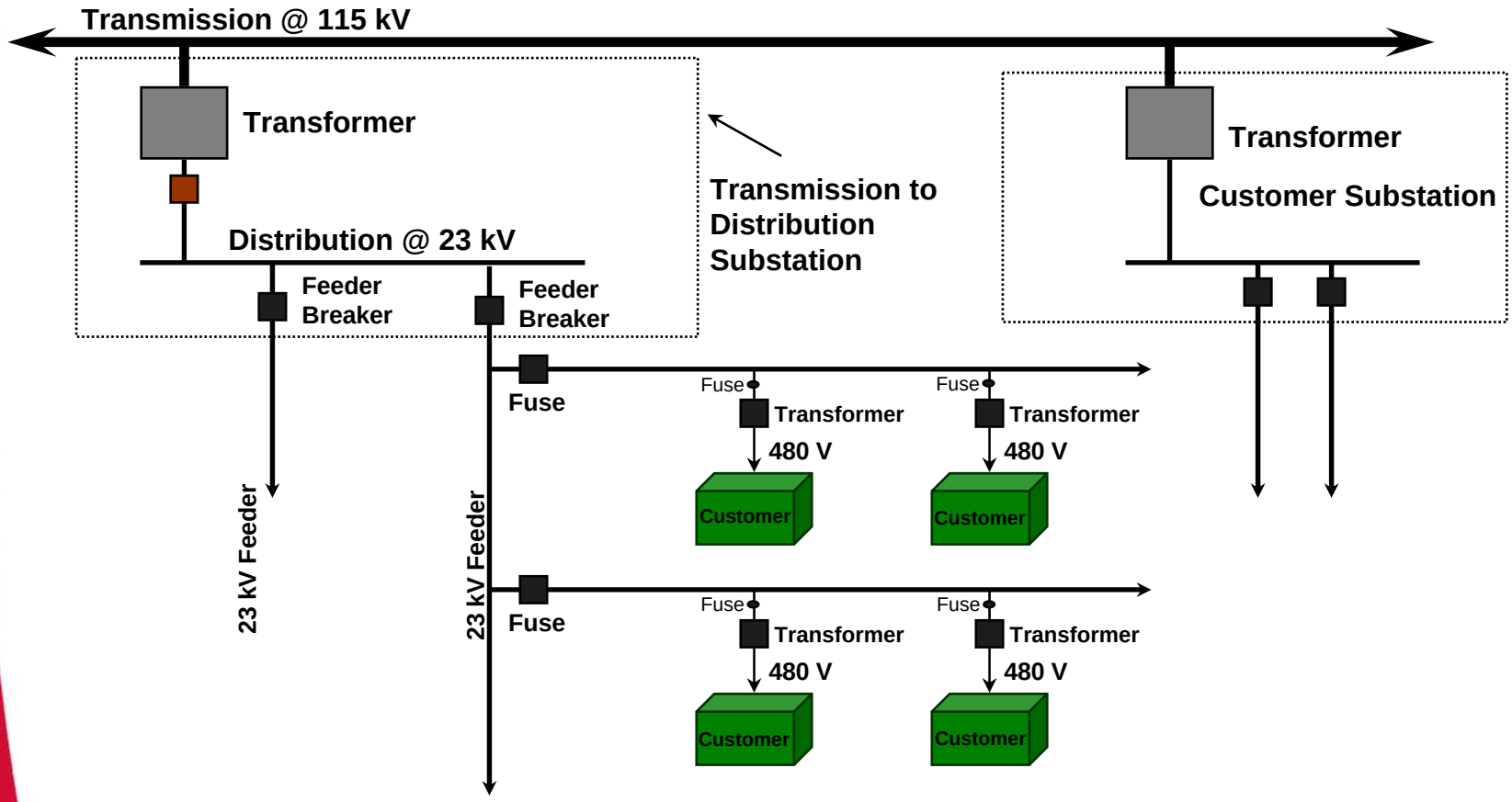

Progress Energy

Fault On Transmission System

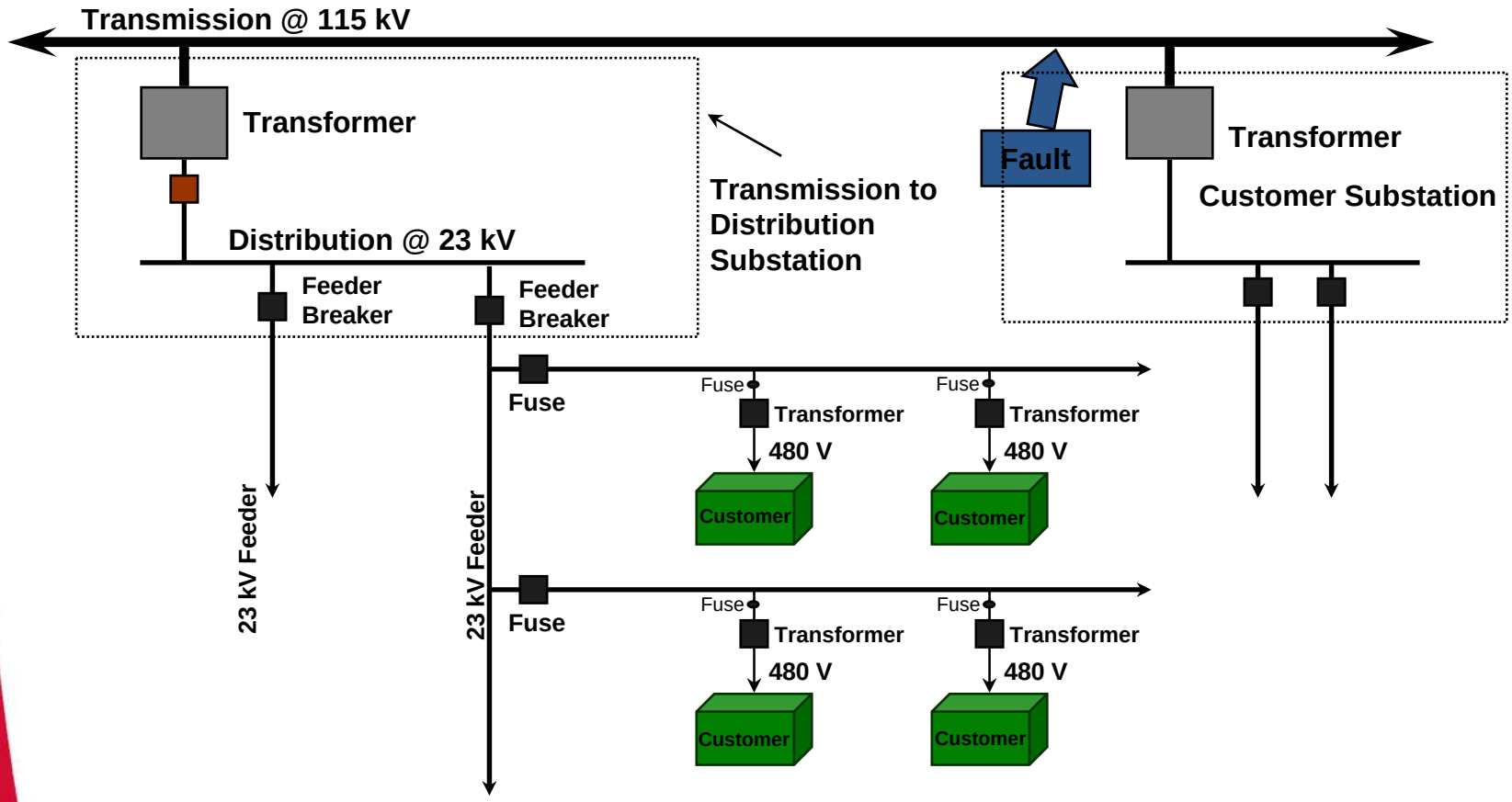

Progress Energy

Fault On Transmission System

Voltage

- All customers (transmission and distribution) served by the faulted transmission line will experience a short *Voltage Sag*.
- Customers served by other transmission lines which connect to the faulted transmission line may also experience a *voltage sag.*
- Depending on the configuration of the transmission line, some customers may experience a *Momentary Interruption* while a fault is clearing.

Fault On Transmission Line

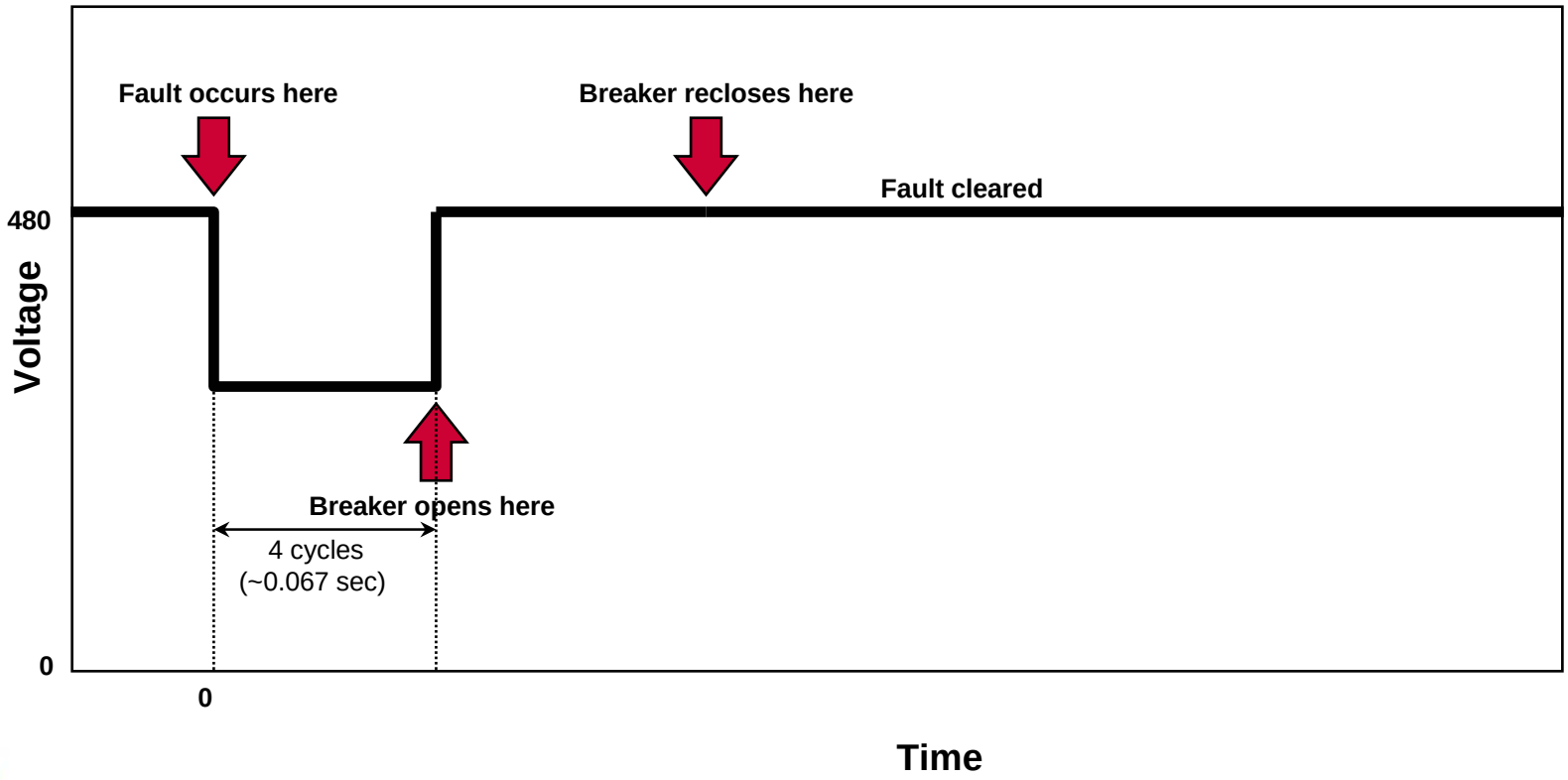

Progress Energy

Four Cycle Voltage Sag

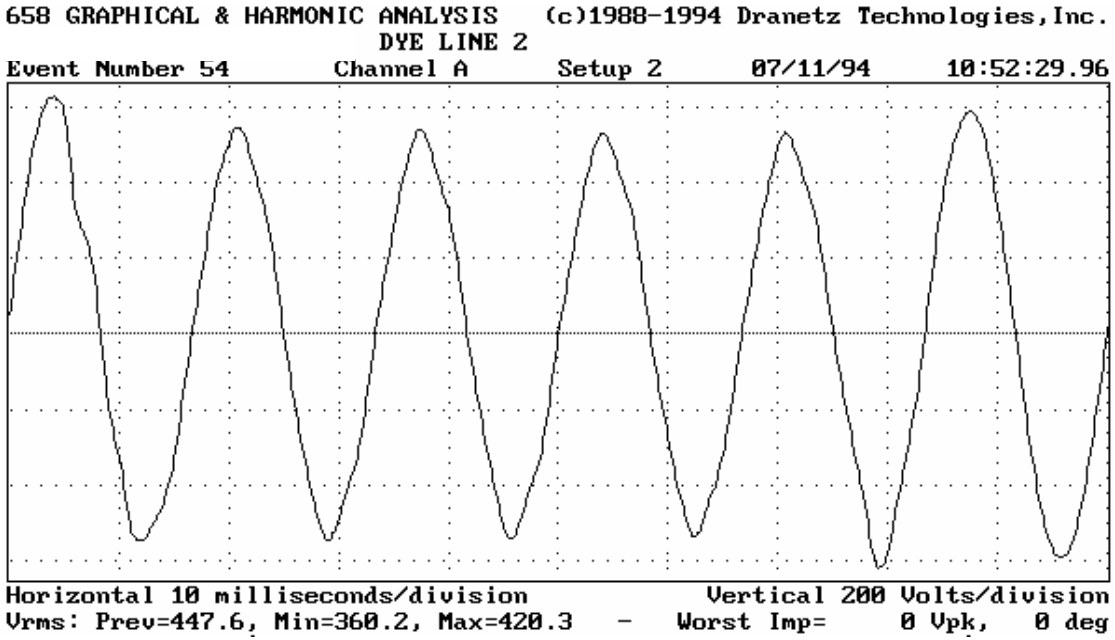

Progress Energy

Causes of Faults on the System

Progress Energy

Simplified Utility System

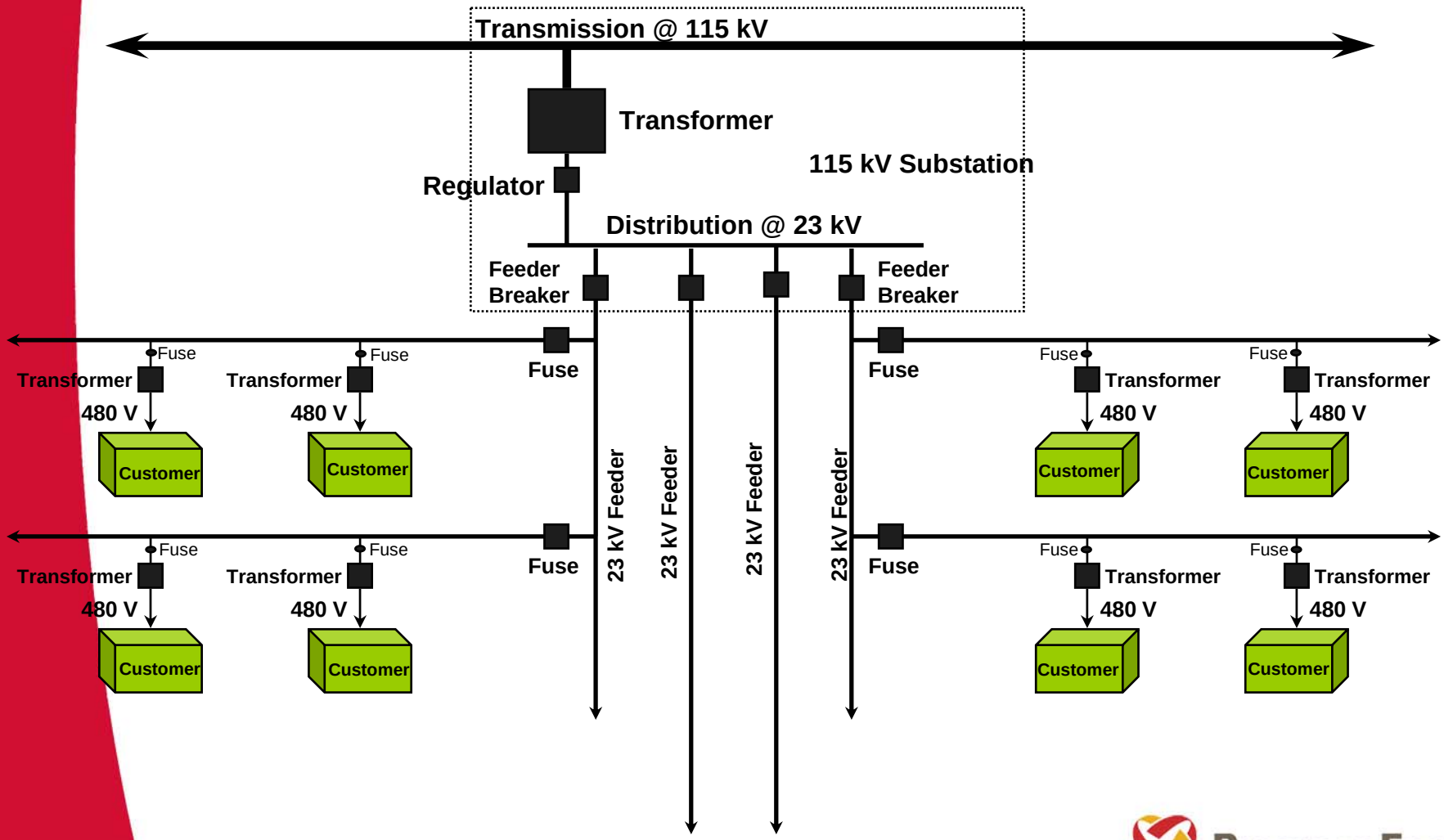

Progress Energy

Example

Progress Energy

Simplified Utility System

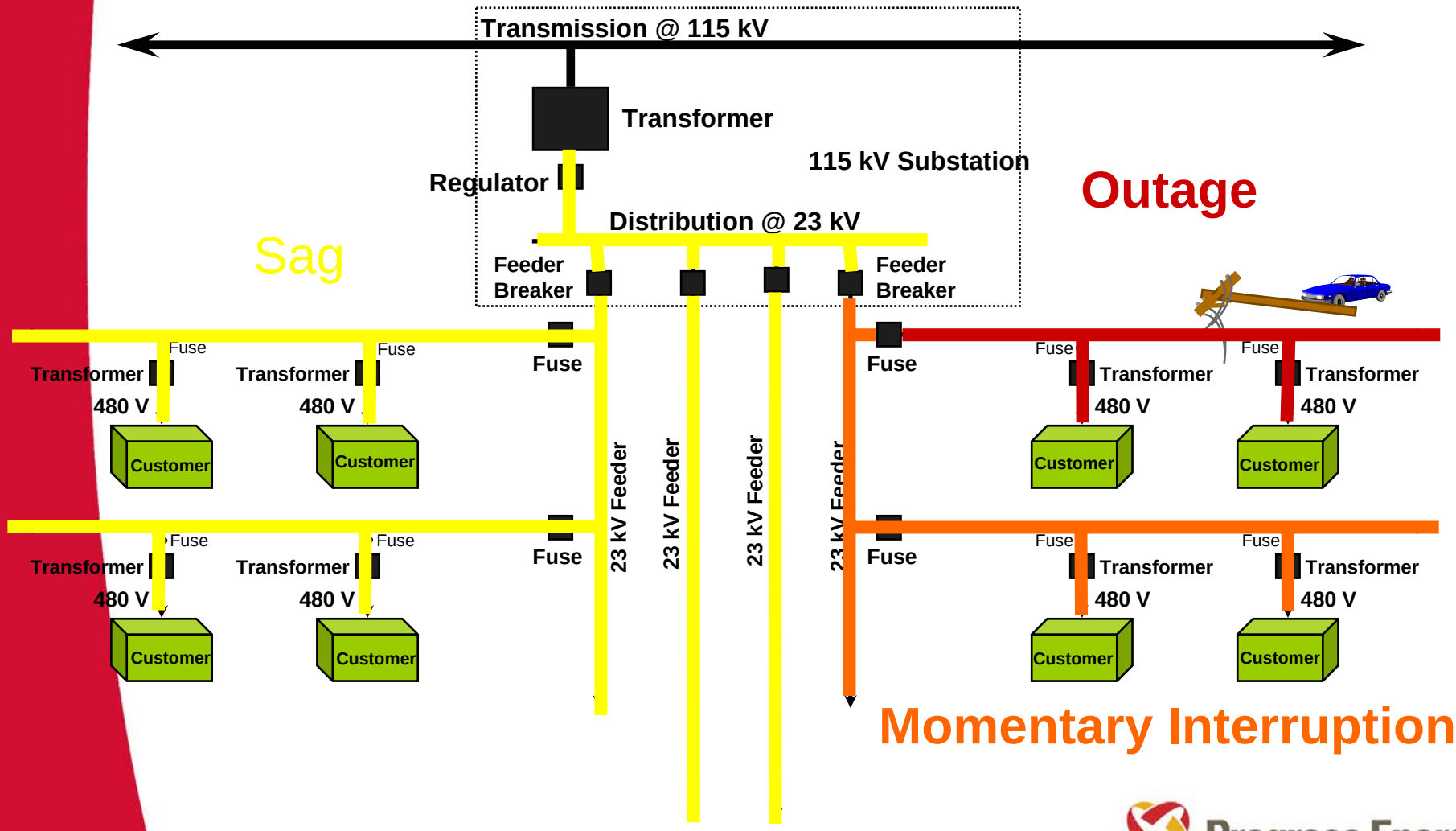

Progress Energy

Fault On Your Feeder

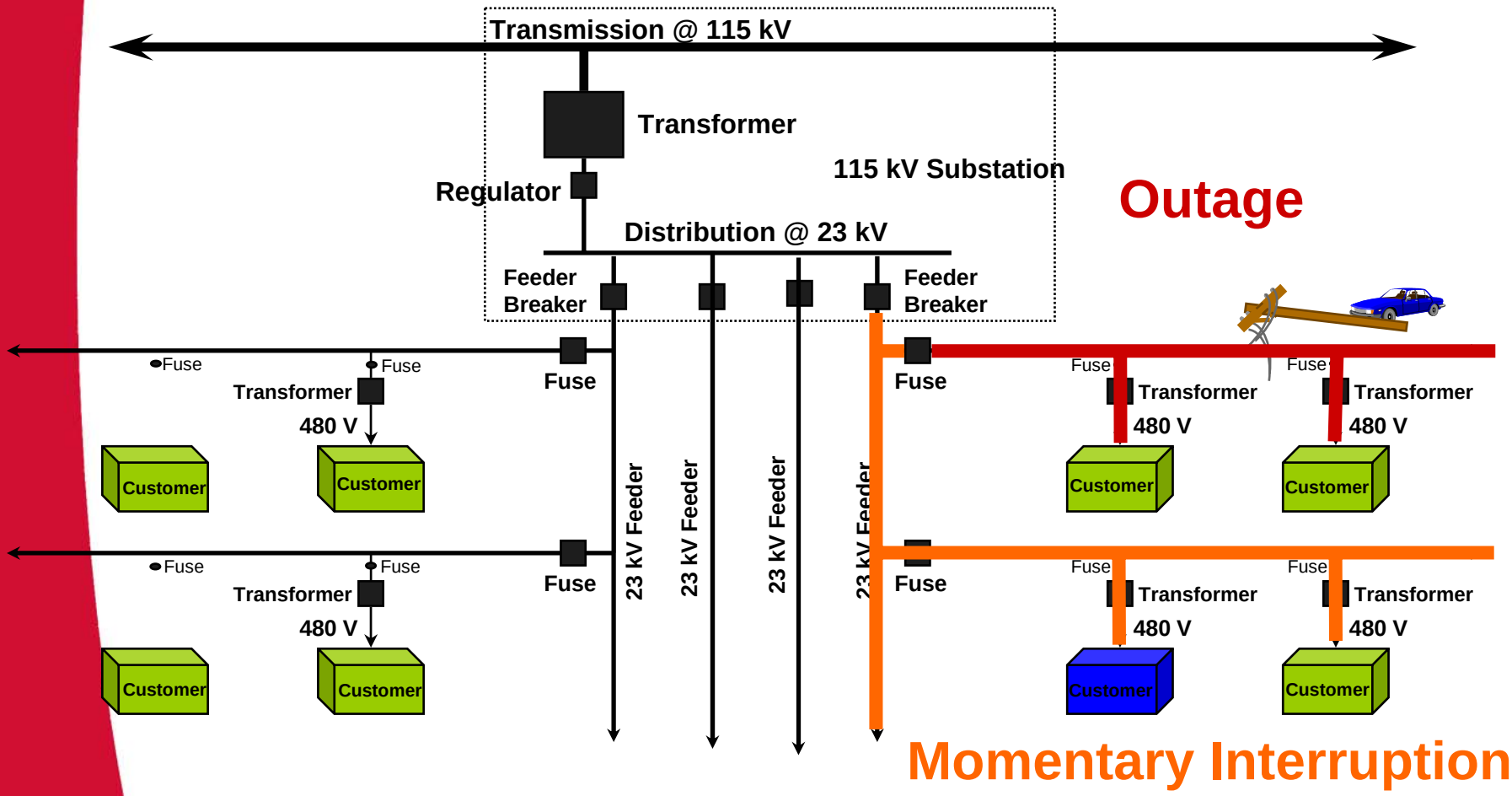

Progress Energy

Fault On Your Feeder

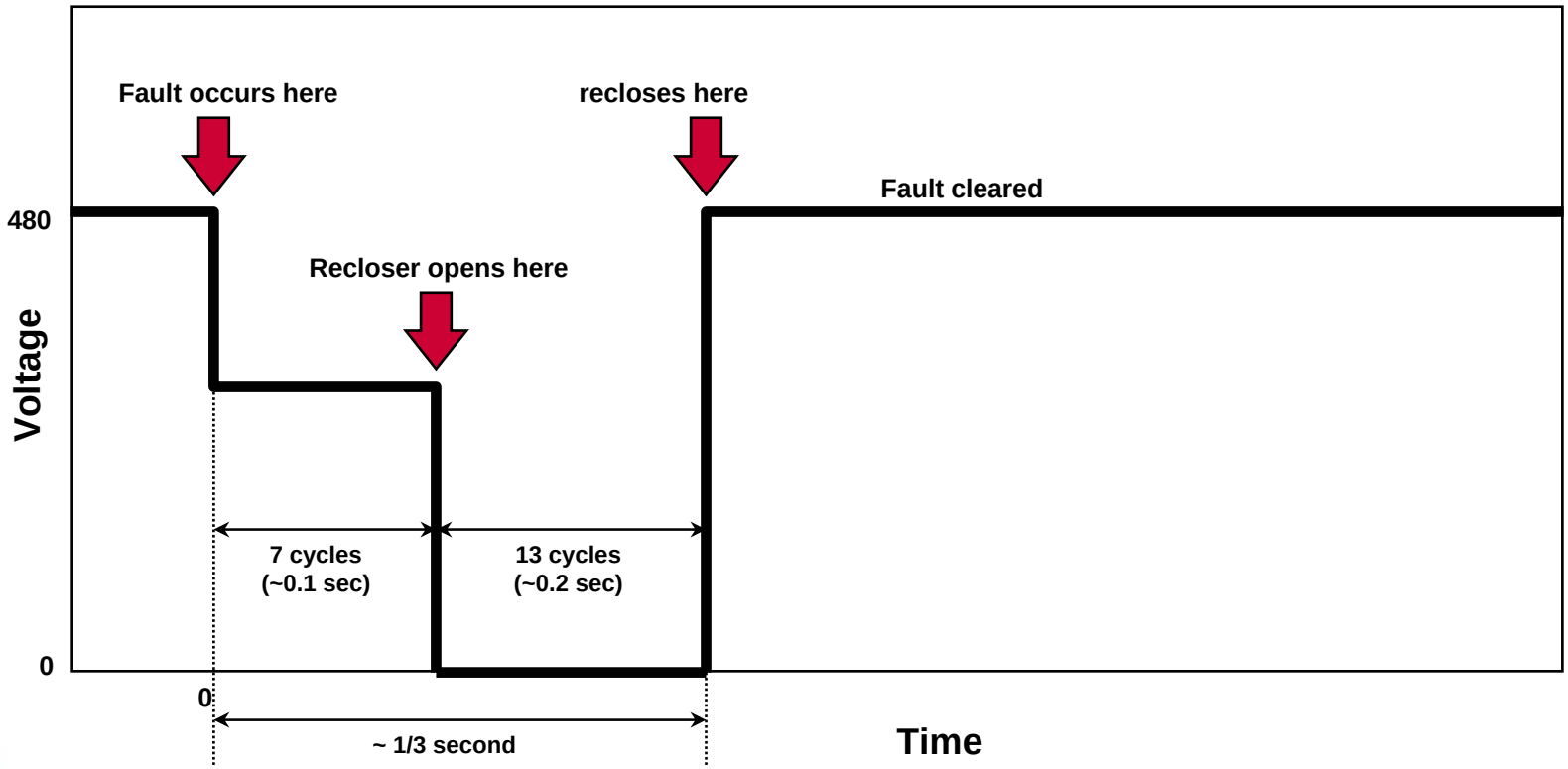

Progress Energy

Voltage Sag & Momentary Interruption

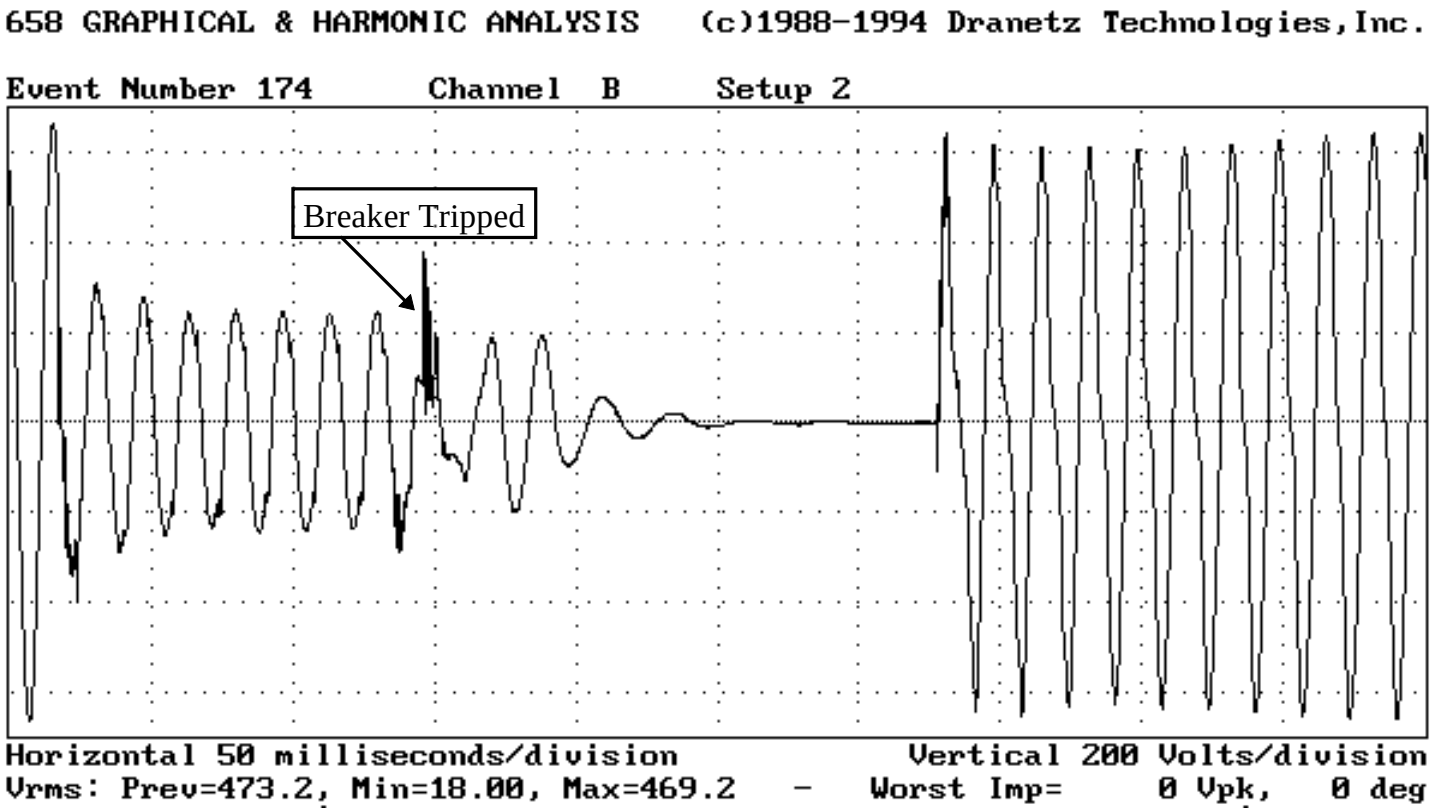

Progress Energy

Progress Energy

Squirrel Guard

Progress Energy

Fault On Adjacent Feeder

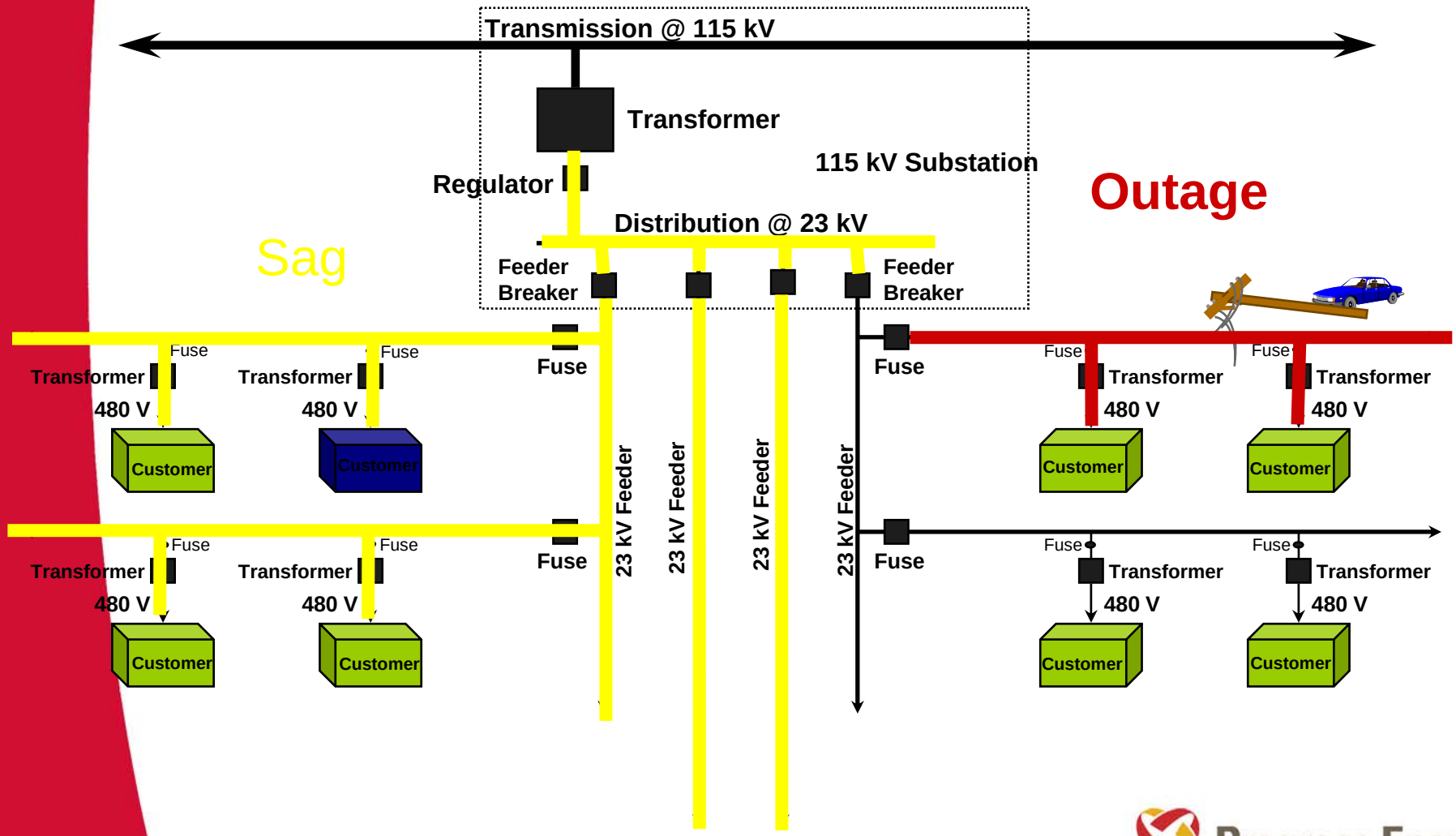

Progress Energy

Fault on Adjacent Feeder

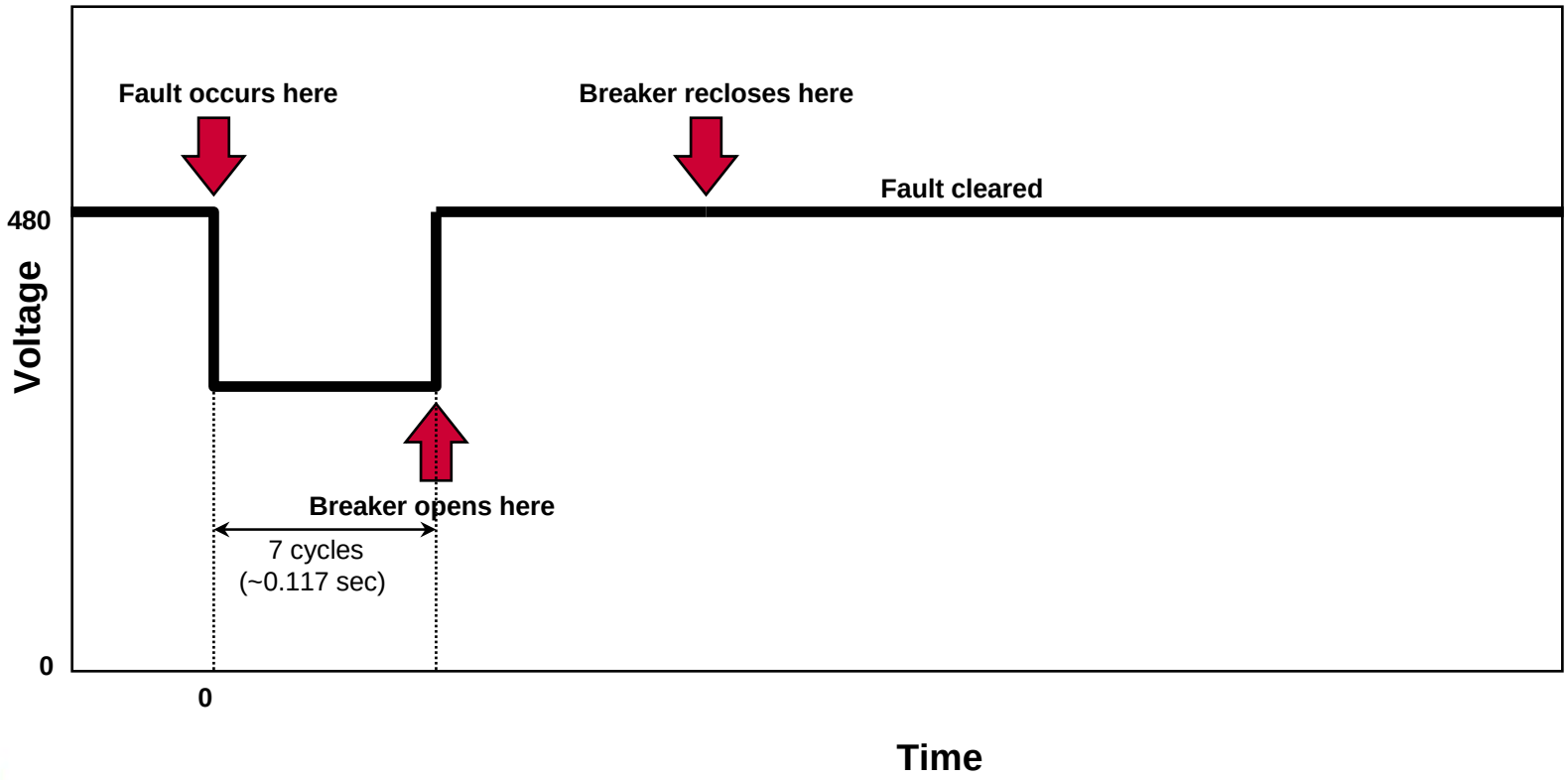

Progress Energy

Voltage Sag Due To Momentary Fault On Adjacent Feeder

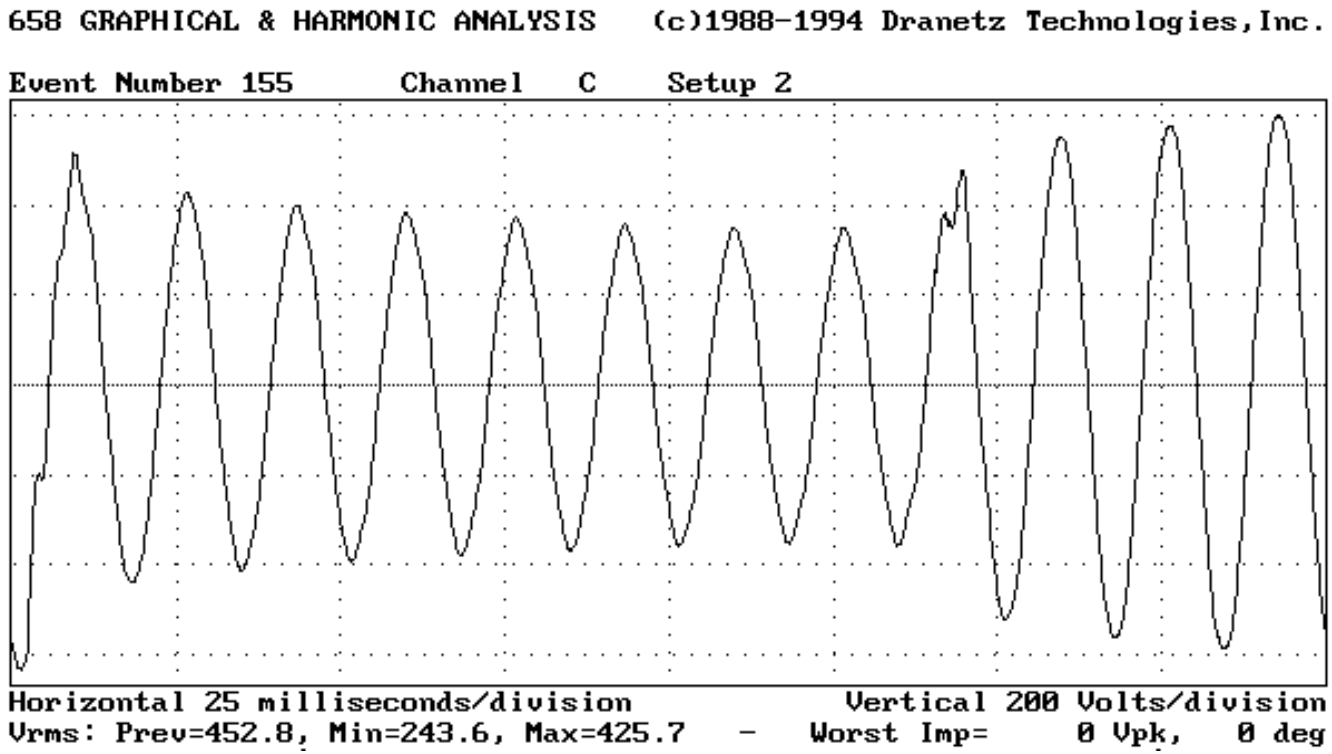

Progress Energy

Fuse Blow and Breaker Operation Due to Fault On Adjacent Feeder

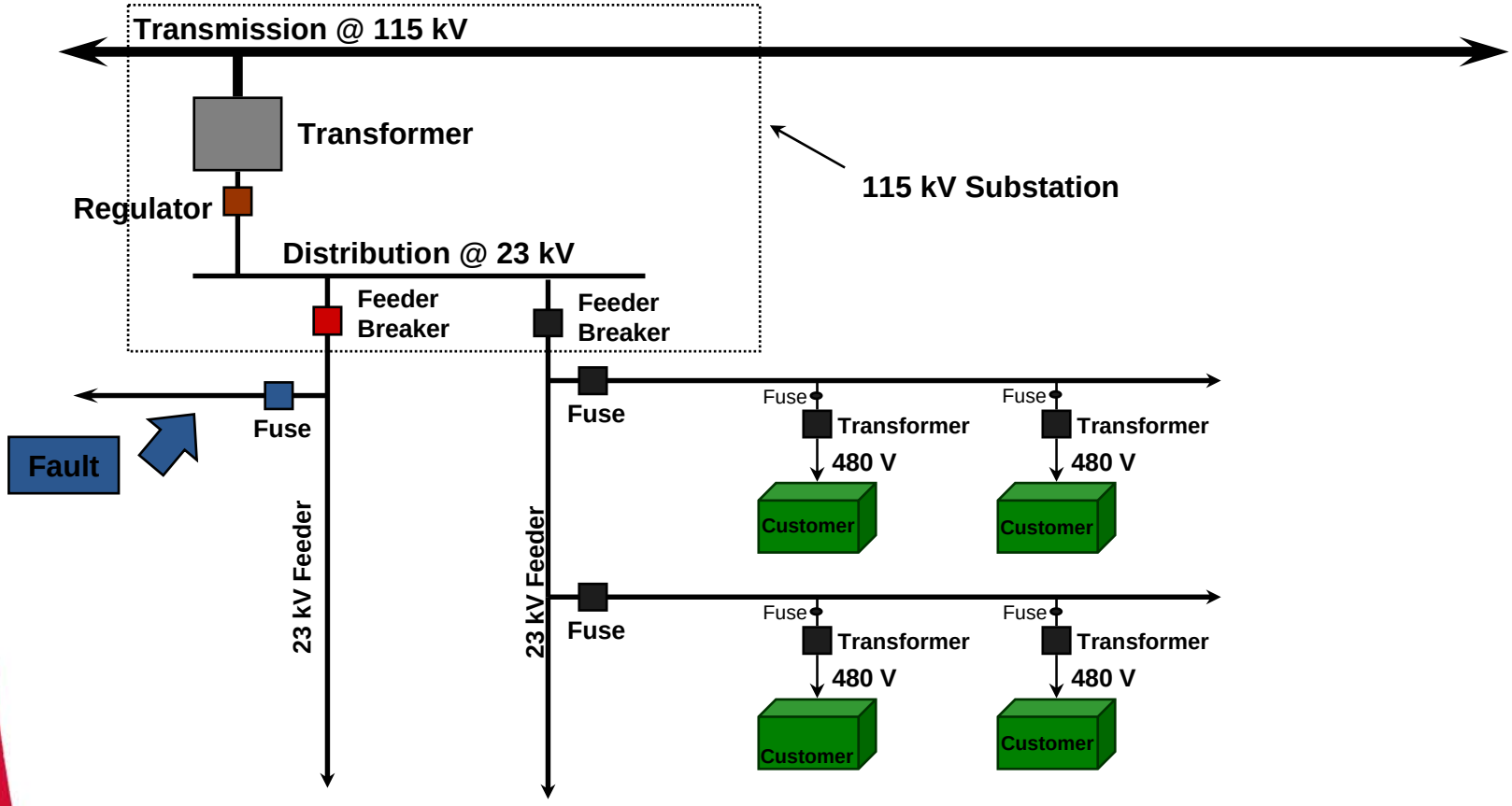

Progress Energy

Open or Blown Fused Cutout

Progress Energy

Voltage Sag Due To Momentary Fault On Adjacent Feeder

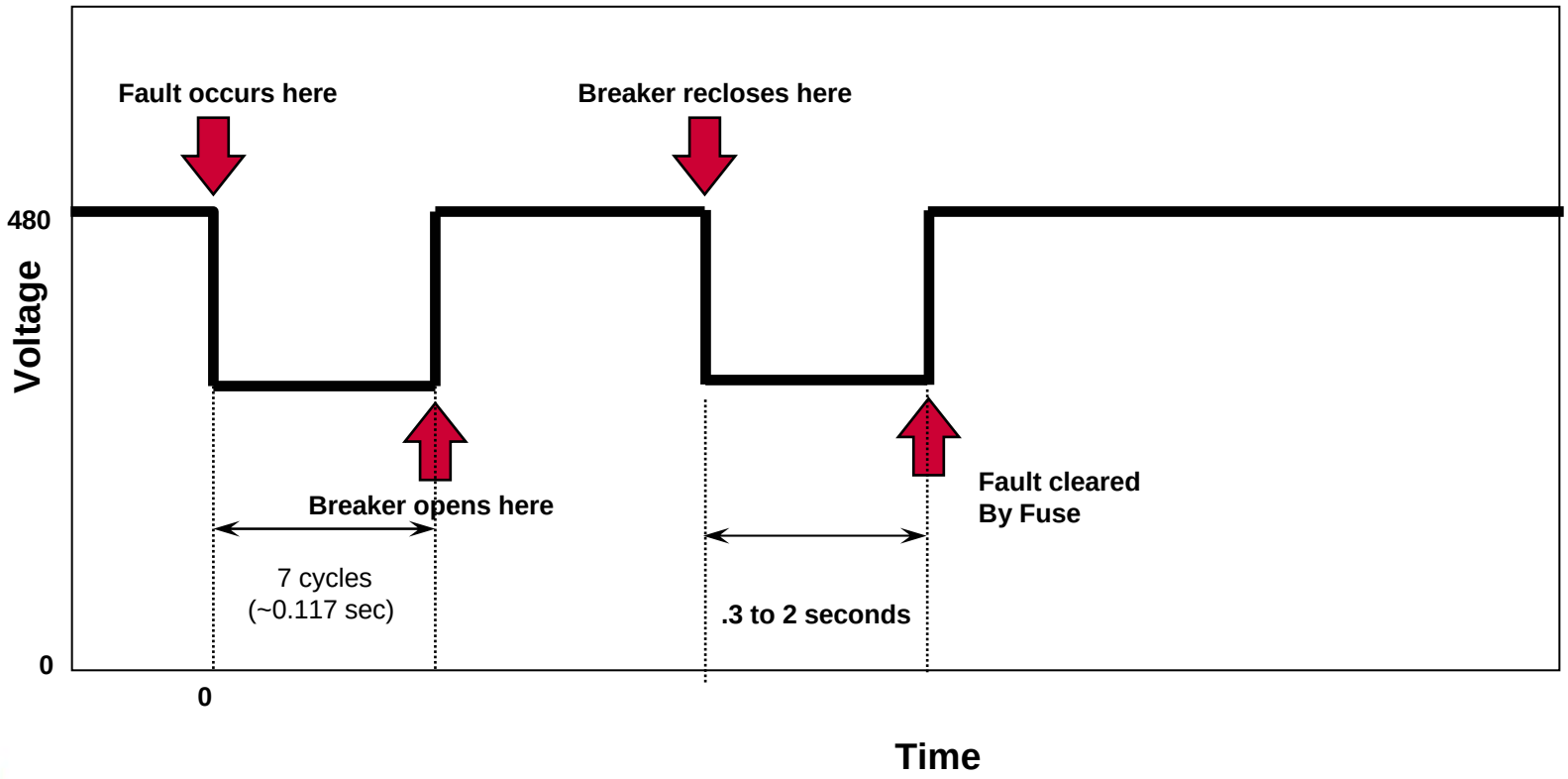

Progress Energy

Fuse Blow and Breaker Operation Due to Fault On Adjacent Feeder

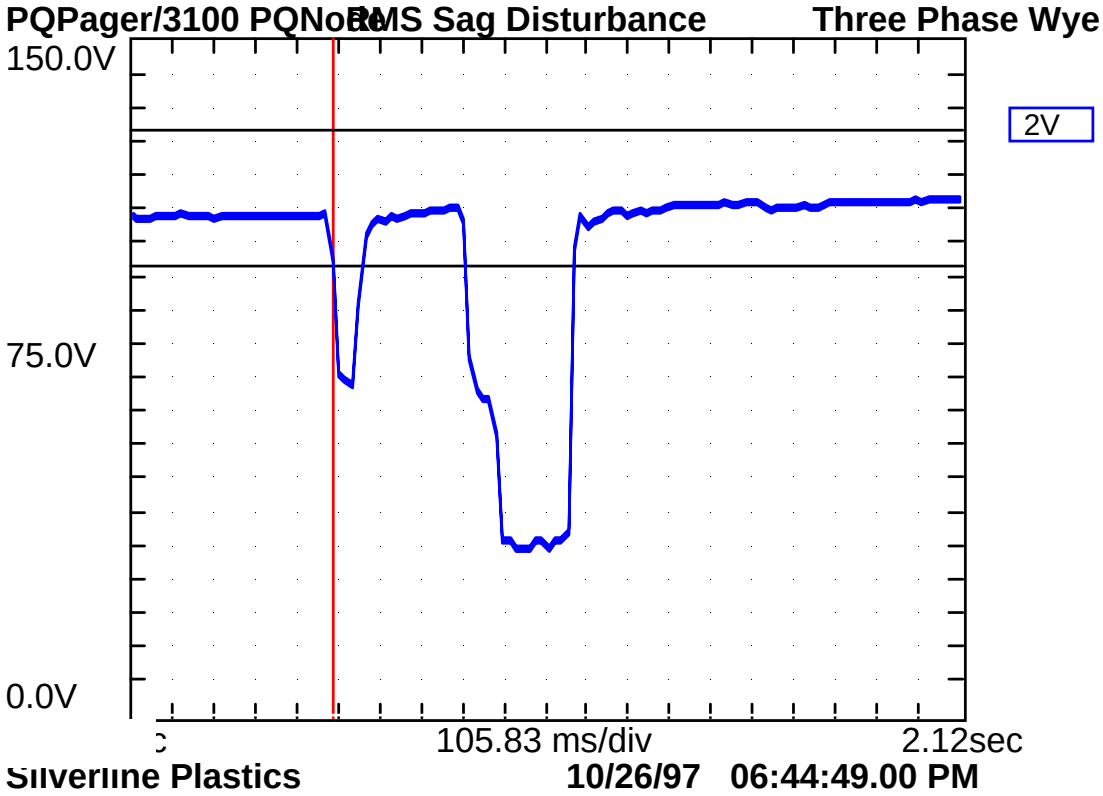

Progress Energy

Permanent Fault On Distribution Feeder

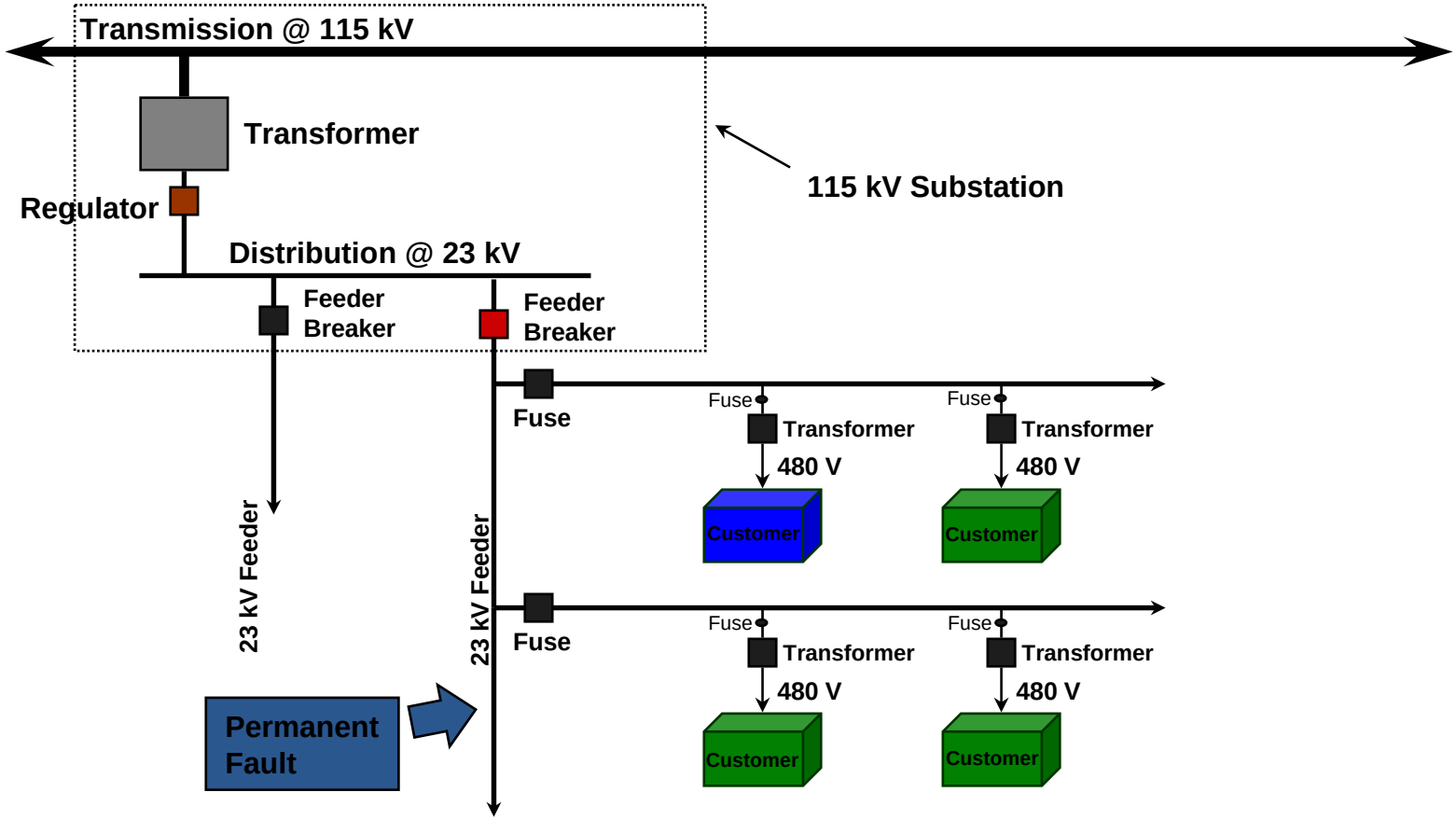

Progress Energy

Voltage During Permanent Fault

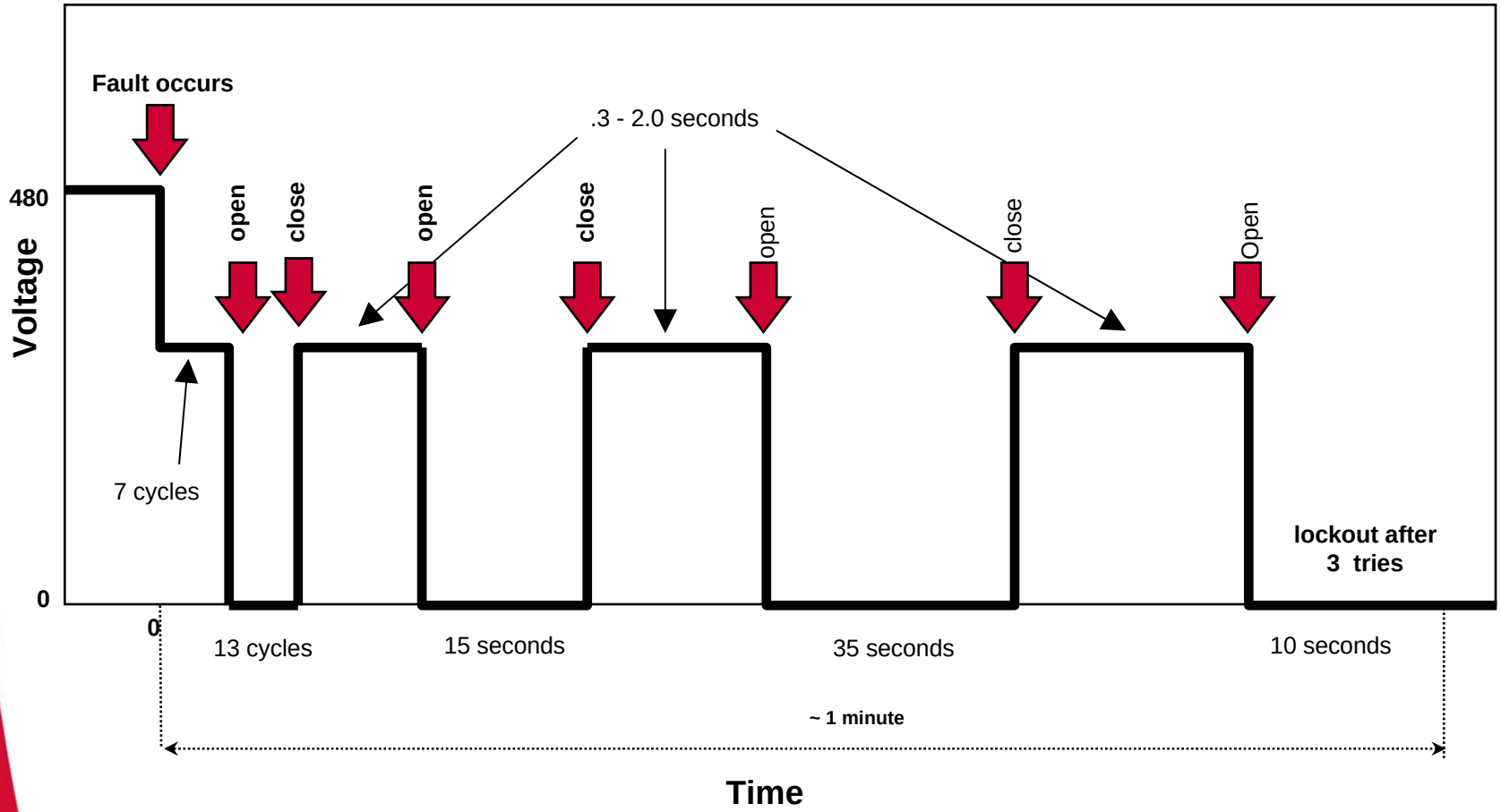

Progress Energy

Fault On Adjacent Feeder

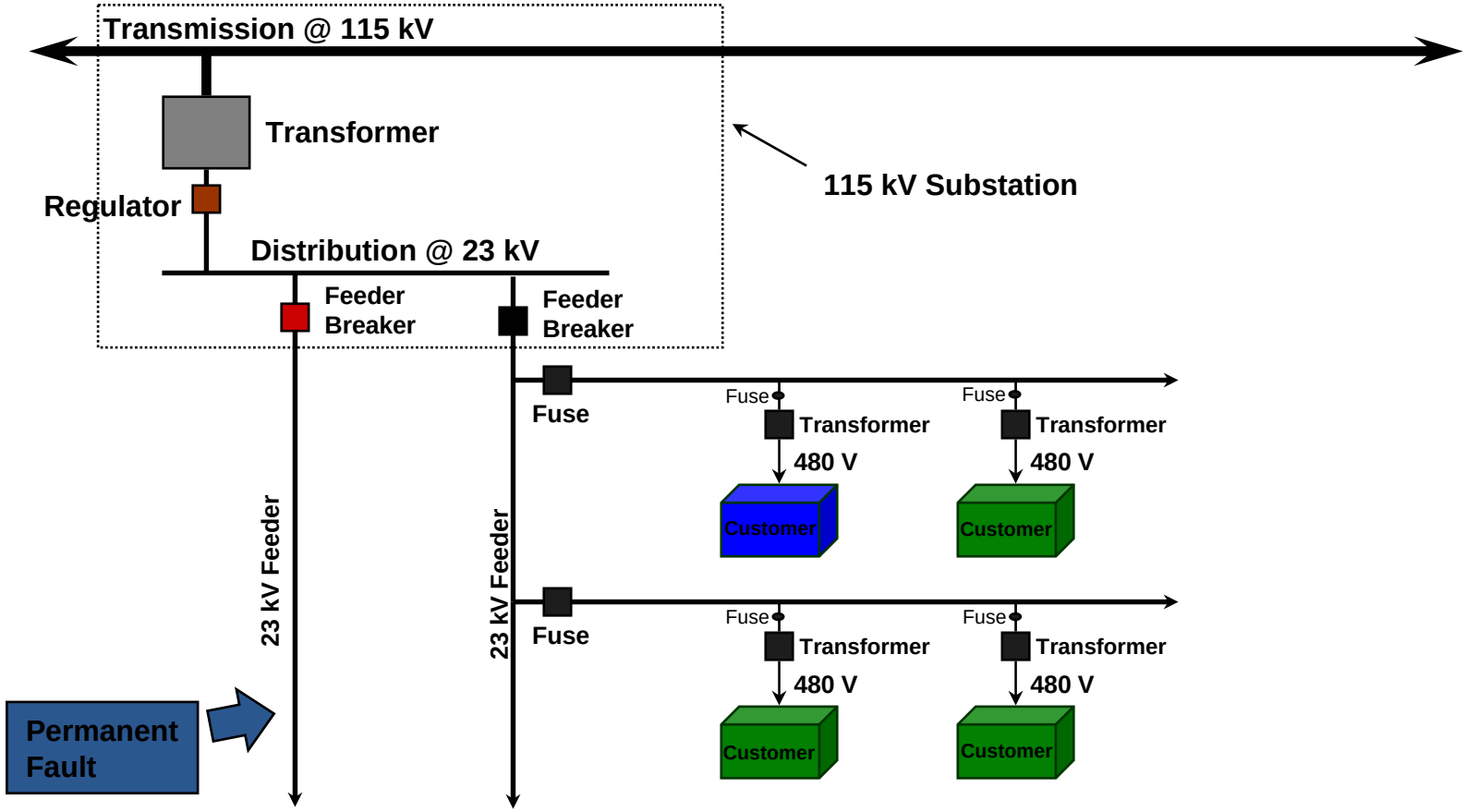

Progress Energy

Voltage During Permanent Fault on an Adjacent Feeder

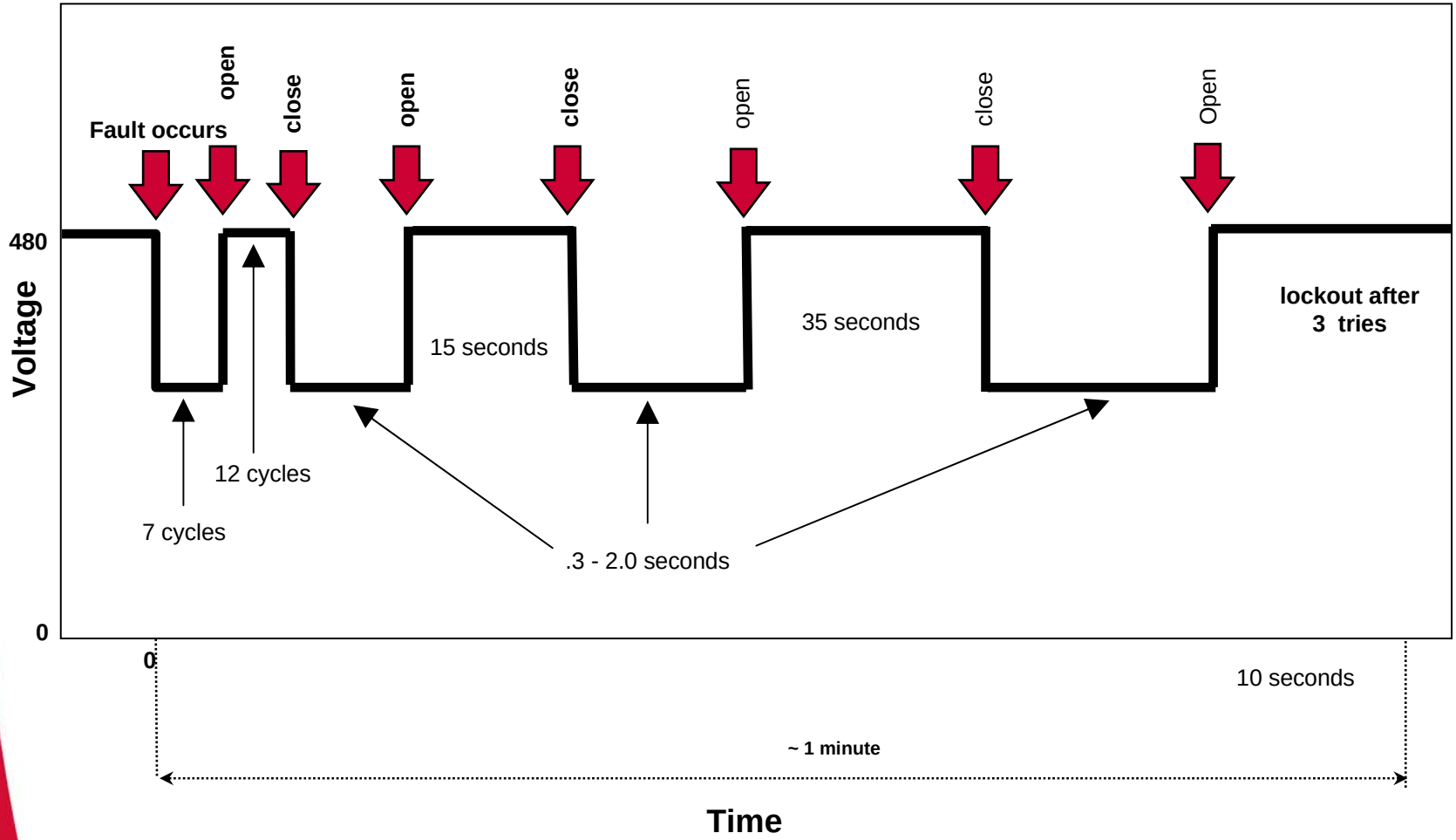

Progress Energy

Substation Voltages During a Feeder Fault

Feeder Breaker Operation

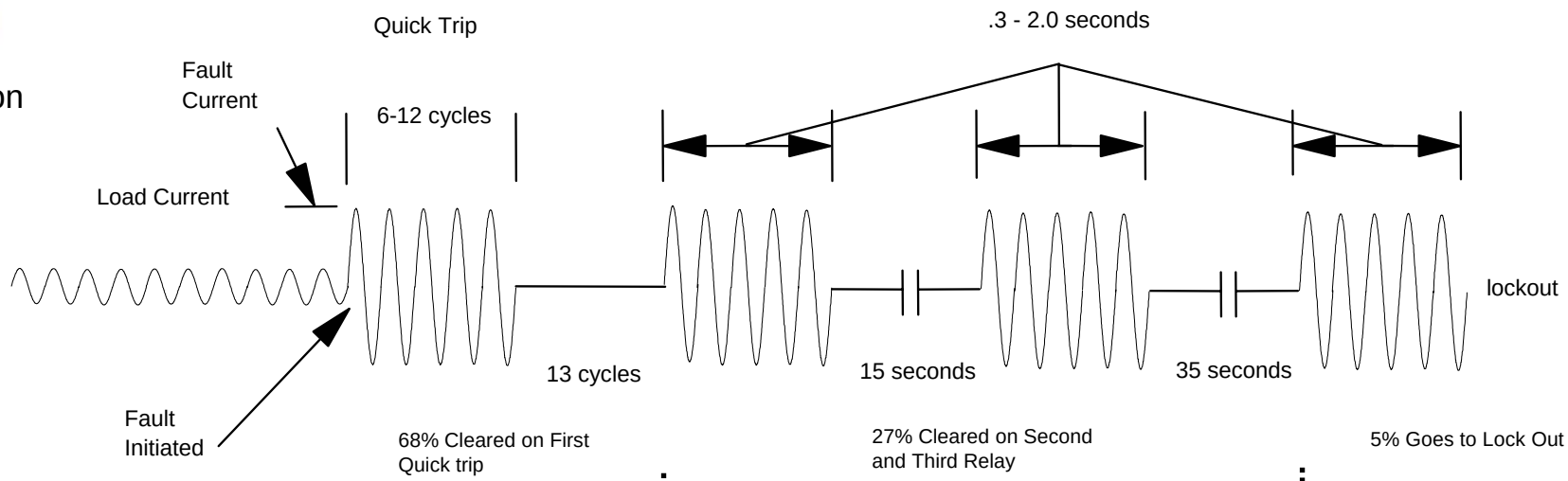

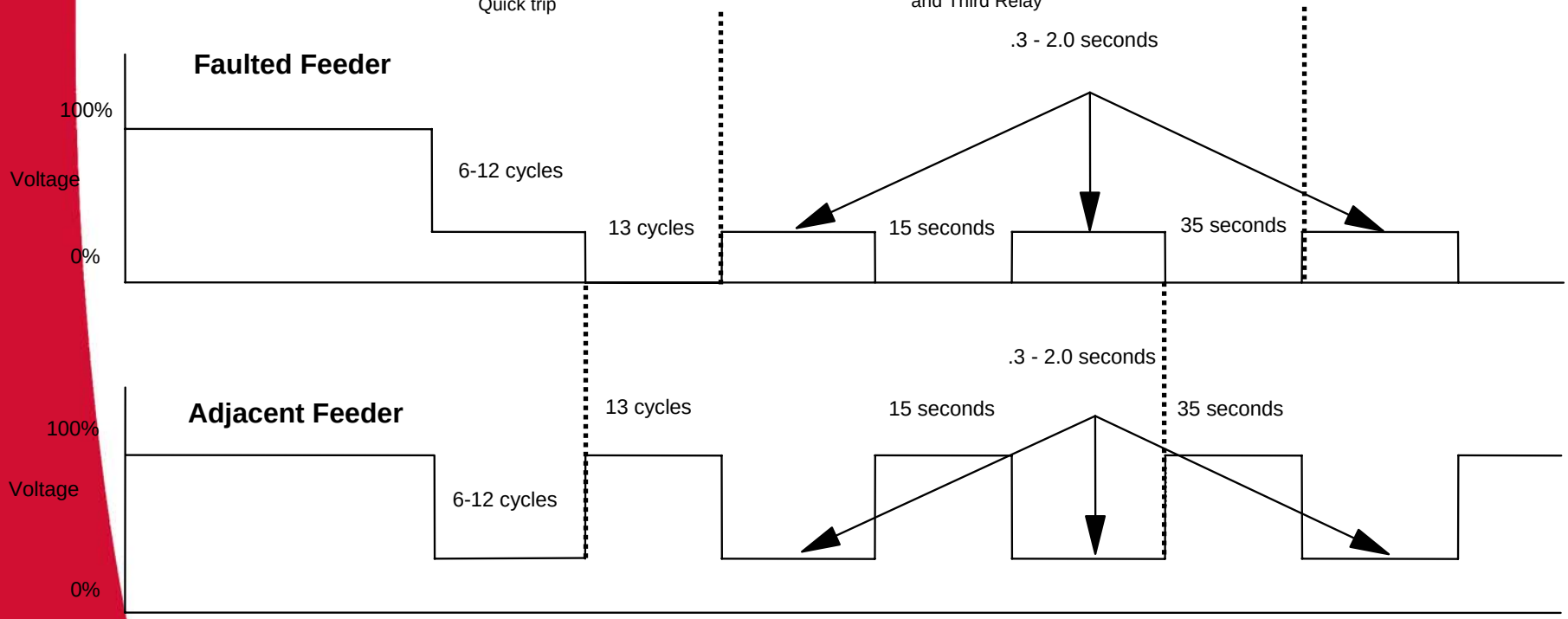

Progress Energy

Single Line of Substation

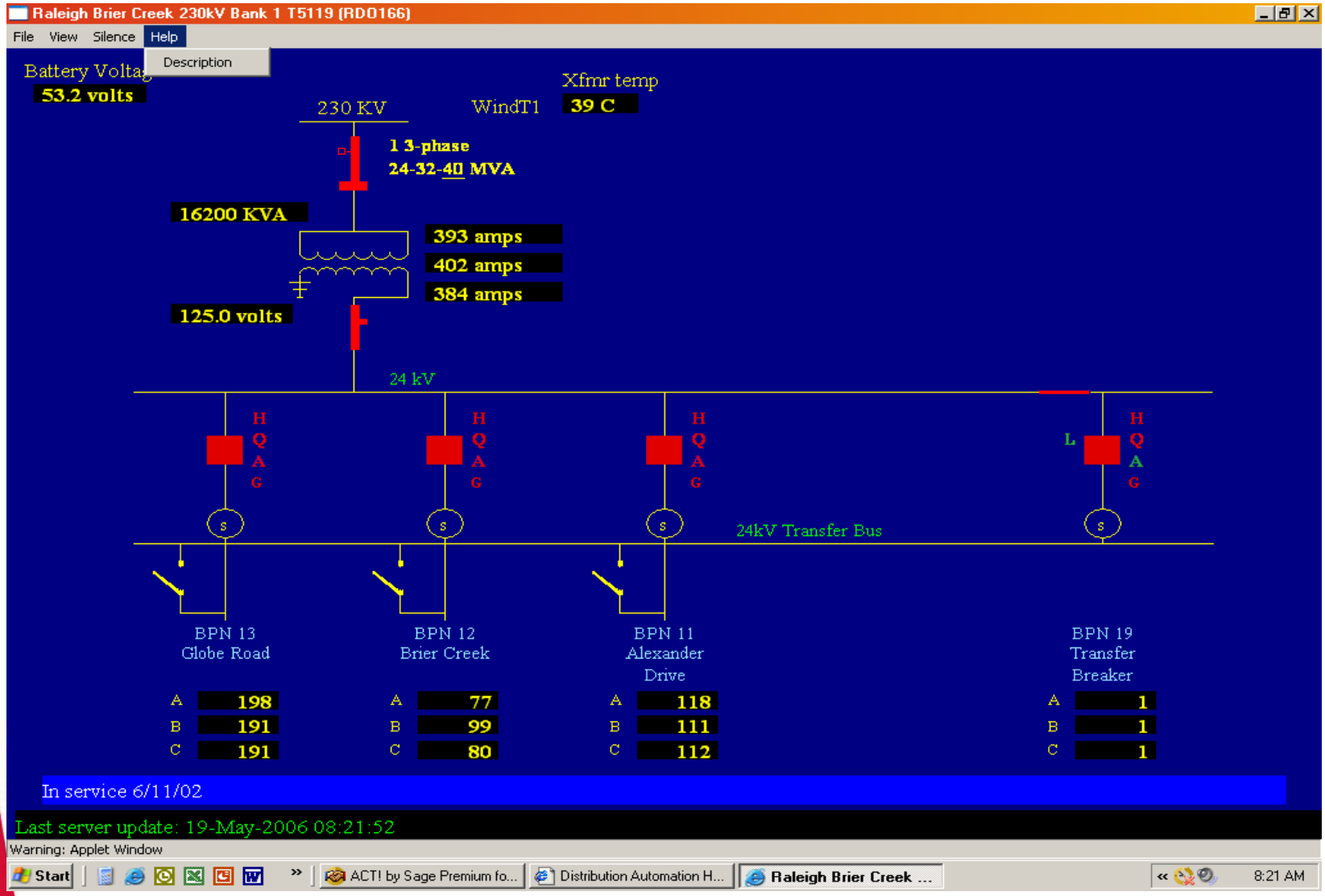

Progress Energy

Utility Protection Coordination Schemes & Equipment

- Fuse Save Scheme
- Fuse Blow Scheme
- Electronic Recloser
- Hydraulic Recloser
- Underground Network
- Electronic Sectionalizer

Capacitor Banks

- Electrical utilities use capacitor banks for power factor correction and voltage support.
- Capacitors are used to meet the reactive power requirements of inductive loads such as motors.
- Switching capacitors can produce *oscillatory transients* which may cause tripping of adjustable speed drives.

Progress Energy

Capacitor Bank Switching Transient

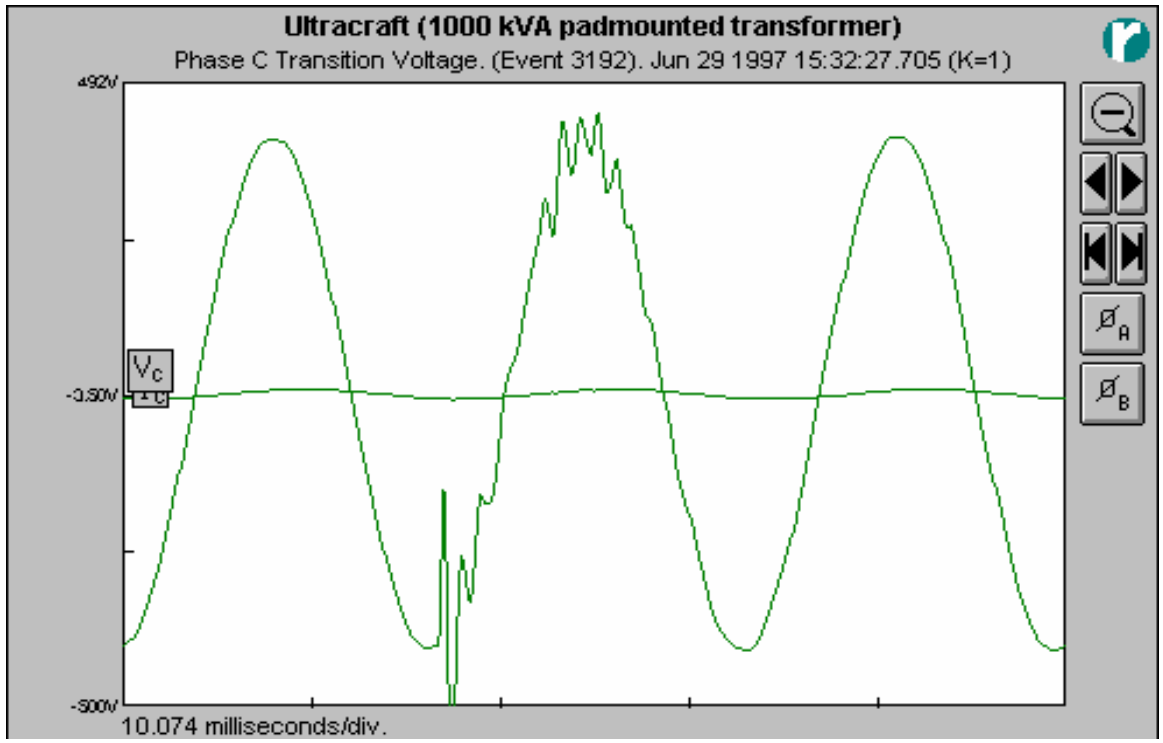

Progress Energy

Line Capacitor Bank

Progress Energy

Line Capacitor Bank

Progress Energy

Utility's Power System

- Utility System Overview
  - Transmission System
  - Distribution System
- How the System Works
  - Transmission
  - Distribution
- Why It Works That Way
  - Design Philosophy
  - Events & Causes
- **Questions?**

Progress Energy